BONE BUILDERS!

Bone Builders is offered through the Hudson Senior Center!

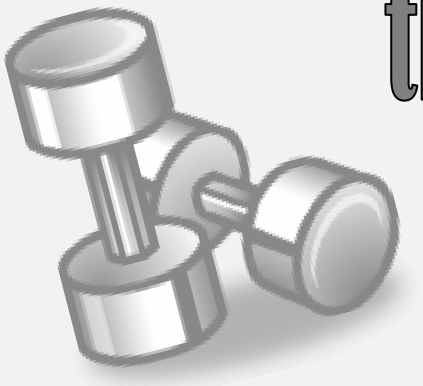

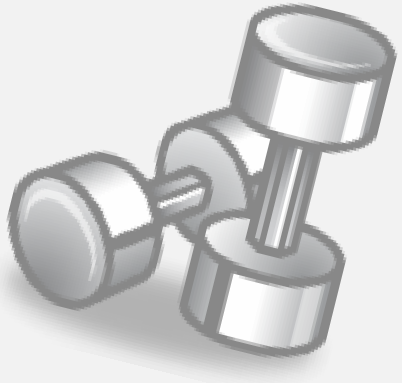

Classes are every Tuesday at the Barn

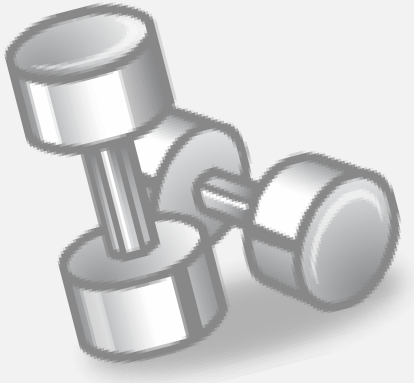

9am - 10:30am

Sign up today!

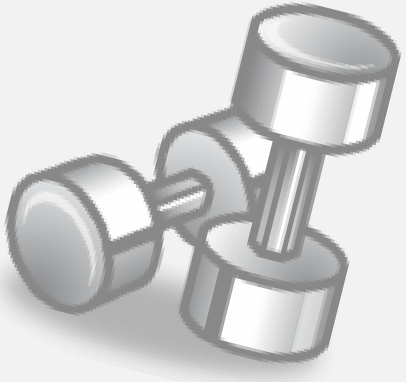

Southern New Hampshire Services

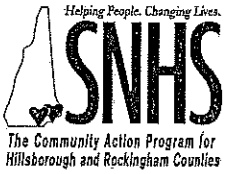

Retired and Senior Volunteer Program (RSVP)
BONE BUILDERS EXERCISE PROGRAM

MEDICAL RELEASE STATEMENT FOR EXERCISE

Patient Name (Please Print) _____

Address_____

Class Location:

Your patient would like to participate in an on-going osteoporosis prevention exercise program. The ***RSVP BONE BUILDERS*** Program is based on a program originally developed at Tufts University. Research published in the New England Journal of Medicine and JAMA have demonstrated conclusively that weight training and balance exercises give participants the strength and stability to significantly reduce incidents of falling and fracturing bones.

Your patient needs your medical clearance in order to join a class. Your patient can provide you with more detailed information about the program if desired. You can also contact us at (603) 598-9421.

This form can be faxed to the Manchester RSVP office at (603) 641-6054.

My patient has no current medical problems that prevent his/her participation in **RSVP BONE BUILDERS** progressive weight and balance training program.

Physician's Name_____

Address _____ Phone _____

Signature _____ Date _____

Southern New Hampshire Services
P.O. Box 5040, Manchester, NH 03108

BONE BUILDERS
CONFIDENTIALITY AGREEMENT

The Bone Builders Program depends upon a climate of mutual caring and trust. To promote trust between the leader/s and the participants we must make proper use of the personal information we are given, as well as being careful not to needlessly discuss the situations we see and hear within the program.

Information pertaining to participants or their respective families relative to medical conditions, financial or personal history is strictly confidential.

In order to maintain the trust required for the Bone Builders Program, we must strive to guard the dignity and privacy of everyone we serve. Personal information should not be shared unless necessary to better meet each persons needs or healthy participation of a member. In this case, the information will be shared only with a certified Bone Builders leader.

_____ _____

Participants Signature Date

_____ _____

Bone Builders Leader Signature Date